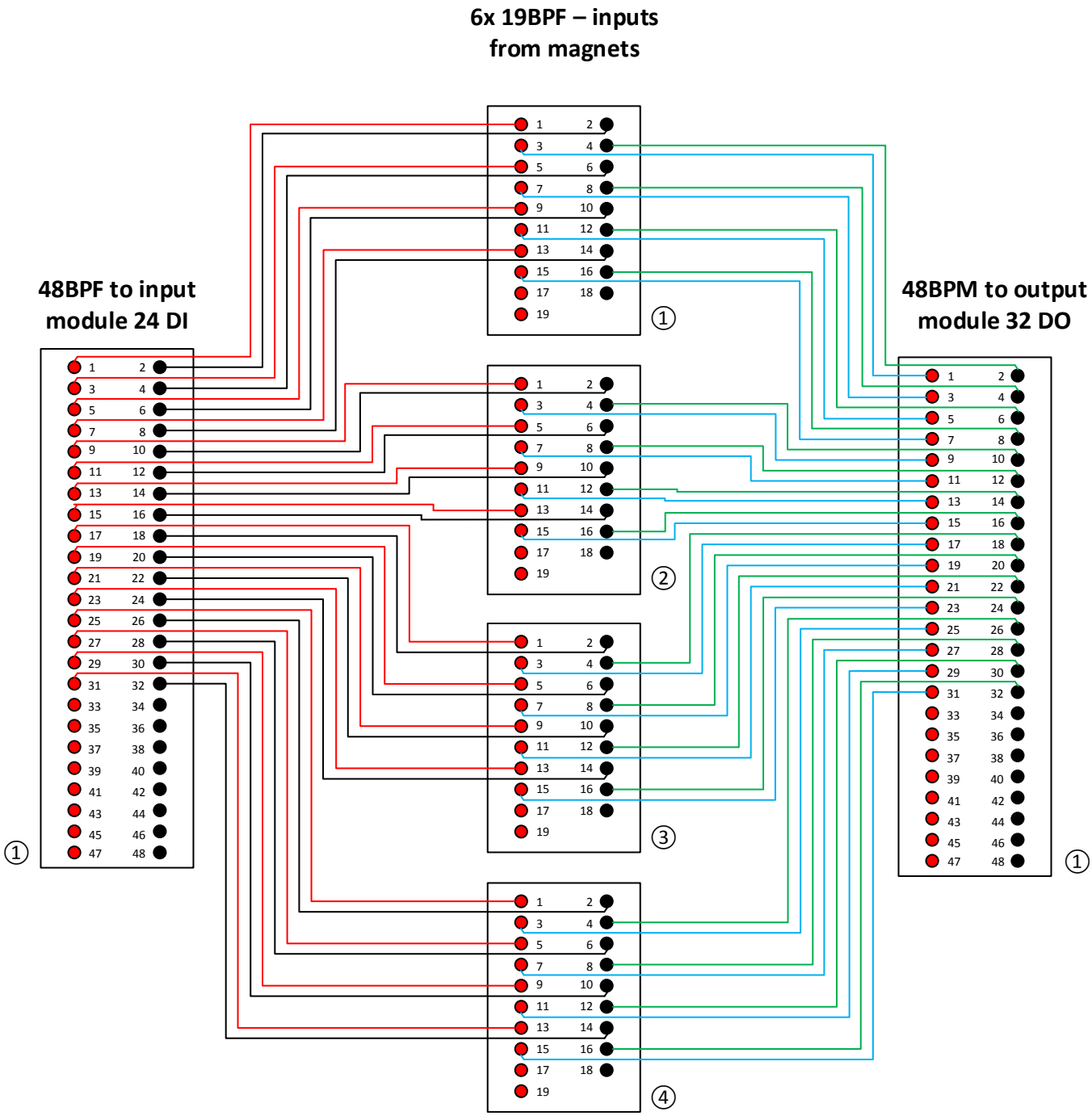

CERN	**Cabling of «Generic patch panel with 6 x 19BPF connectors for 4-ch. Interlock boxes»** Page 1/2	Project: WIC Filename: Cablage generique pour PP 6 x 19BPF v1.0.vsd TE/MPE-MS: Richard Mompo Last updated: 12.10.2015

48BPF to input module 24 DI

6x 19BPF – inputs from magnets

48BPM to output module 32 DO

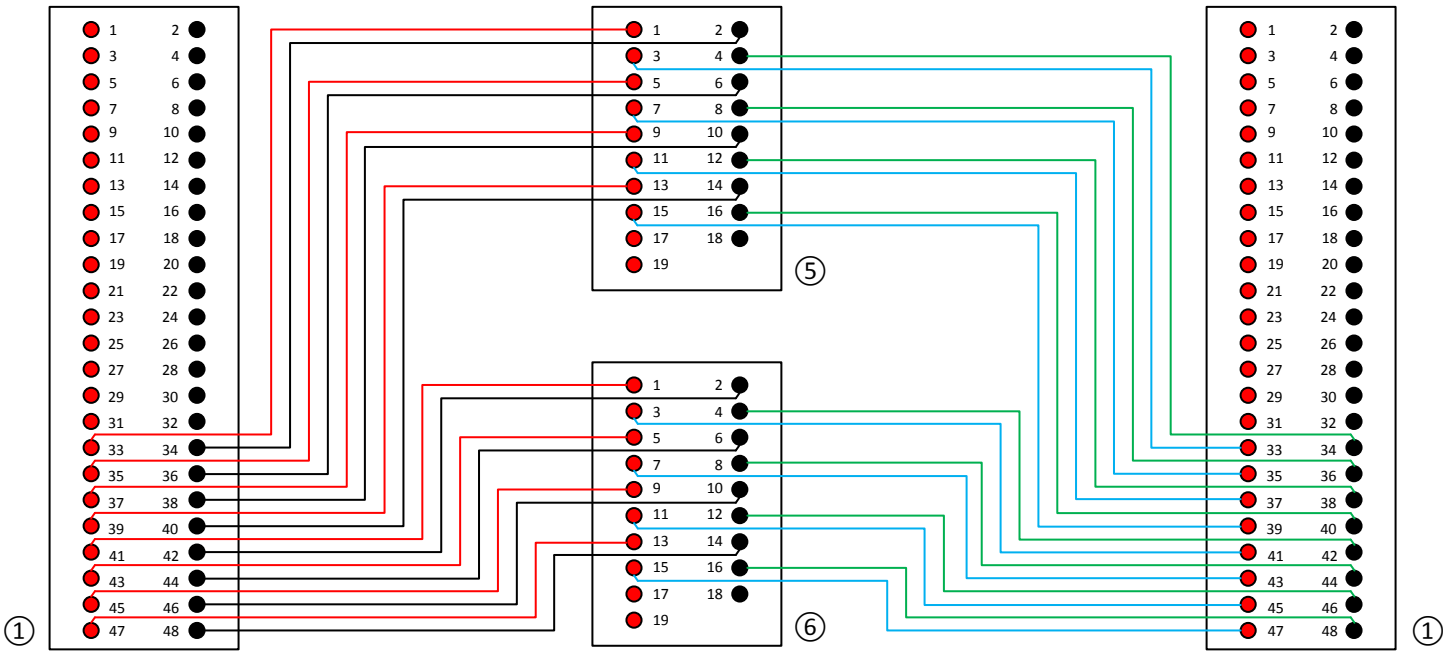

CERN	**Cabling of «Generic patch panel with 6 x 19BPF connectors for 4-ch. Interlock boxes»** Page 2/2	Project: WIC Filename: Cablage generique pour PP 6 x 19BPF v1.0.vsd TE/MPE-MS: Richard Mompo Last updated: 12.10.2015